Document No. 154413-340

CURRENT REVISION
including all changes as of
1976
ENGRG. DATA CONTROL

CIRCUIT CARD DESCRIPTION

RANDOM ACCESS MEMORY (RAM) CARD

TOP ASSY. NO. 154413

DSD RELEASE DATE 3-29-74 J.D.
CATEGORY I RELEASE

PREPARED BY [illegible] DATE 3/28/74

APPROVED BY [illegible] DATE 3/28/74

TOTAL PGS. 5

CIRCUIT DESCRIPTION

RAM CARD (154413)

1.0 CIRCUIT FUNCTION

The Random Access Memory (RAM) card (154413) is one of eight cards that make up the Central Logic of the Communication Control Unit (CCU). The RAM card provides 1024 x 8 bits of random access (read/write) memory; which is used as a scratch pad (temporary storage of data being used in computations), as well as storage of the system status. Figure 1 is a block diagram of the RAM card.

2.0 ELECTRICAL OPERATION

The RAM card has the capability to store 2K worth of 8-bit words. Only 1K words are needed for the CCU. The RAM chips are used to store the keyboard entered data, display information for the LEDs, voice and data interconnections, ring conditions to and from the subscribers, and various temporary storage for controlling the CCU operations.

3.0 PRIMARY POWER

The following voltages and currents will be required for card operation:

+5.0 ± 0.25V @ 560 ma maximum

4.0 INPUT CHARACTERISTICS

Input "Low" voltage is 0.075 ± 0.575 volts

Input "High" voltage is 3.75 ± 1.5 volts

5.0 OUTPUT CHARACTERISTICS

Output "Low" voltage is +0.45 with 1.9 ma sink current

Output "High" voltage is 2.25V with 100 ua output current

6.0 RELIABILITY

The reliability as calculated for the 154413 is as follows:

@ 50°C is 1.34 FPM

7.0 ATTACHMENTS

Figure 1 - Block Diagram of RAM Card

8.0 IMPORTANT DOCUMENTS

Schematic	154413-300
Top Assembly	154413
Test Specification	154413-720

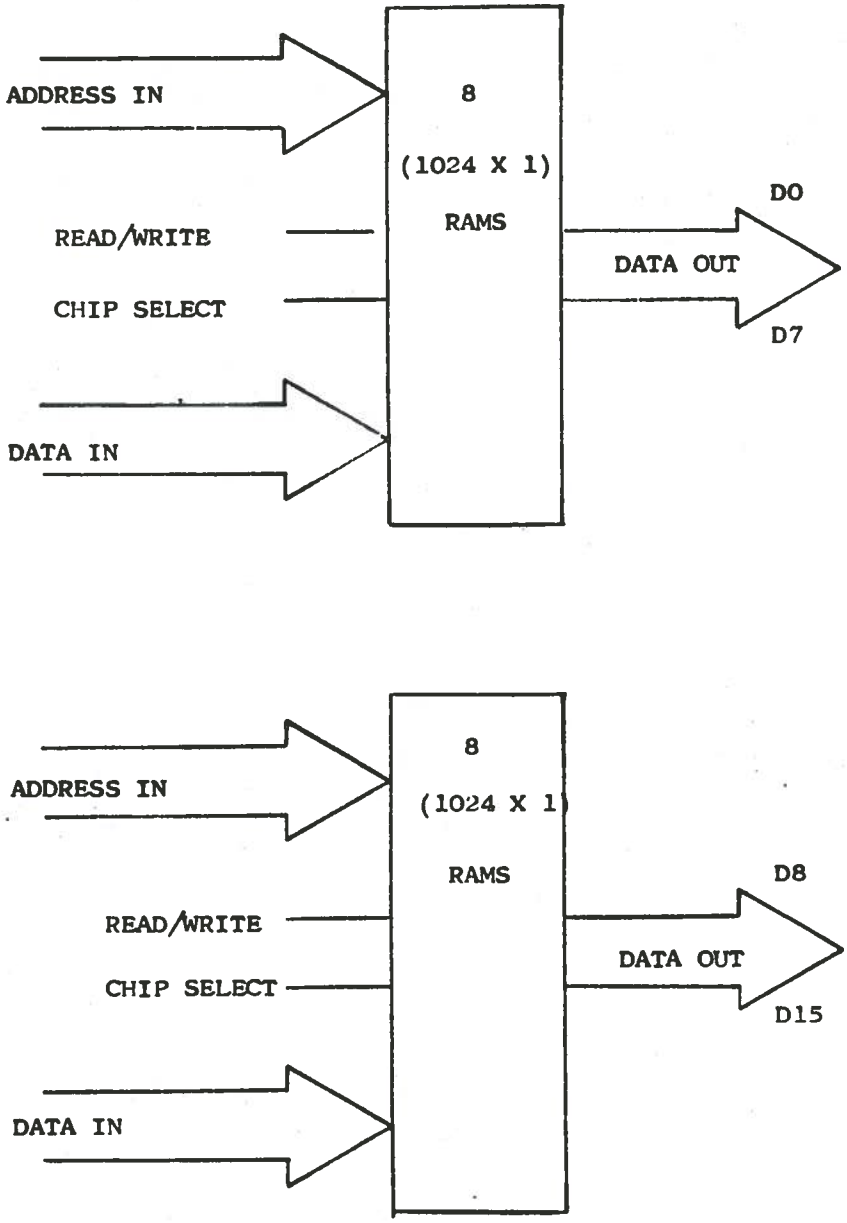

Figure 1

BLOCK DIAGRAM OF RAM CARD

THIS DRAWING CONTAINS INFORMATION PROPRIETARY TO LITTON SYSTEMS INC. ANY REPRODUCTION, DISCLOSURE OR USE OF THIS DRAWING IS EXPRESSLY PROHIBITED EXCEPT AS LITTON SYSTEMS INC. MAY OTHERWISE AGREE IN WRITING.

REVISIONS			
LTR	DESCRIPTION	DATE	APPROVED

NOTES: UNLESS OTHERWISE SPECIFIED

A. APPLICABLE DOCUMENTS:

FLOW SOLDER SPEC	893801
CONFORMAL COAT SPEC	893306
MARKING SPEC	894201

B. REFERENCE DOCUMENTS:

SCHEMATIC DIAGRAM	154413-300
TEST SPECIFICATION	154413-720

REV

PL 154413

DO NOT SCALE DWG

INITIAL APPLICATION SHOWN. FOR COMPLETE USAGE DATA, SEE APPLICATION DATA INDEX 126603.

154184	TOS2
NEXT ASSY	USED ON

APPLICATION

UNLESS OTHERWISE SPECIFIED

INTERPRET PER MIL STD-100
INTERPRET DIMENSIONS AND TOLERANCES PER ANSI Y14.5
DIMENSIONS ARE IN INCHES
SURFACE TEXTURE SHALL BE √
DIMENSIONS APPLY AFTER PLATING
REMOVE BURRS AND SHARP EDGES
PARENTHETICAL DATA FOR INTERNAL LITTON REFERENCE ONLY

TOLERANCES

ON DECIMAL DIMENSIONS	ON ANGULAR DIMENSIONS
.X ± .1	CHAMFERS ± 5°
.XX ± .03	FORMED ± 2°
.XXX ± .010	LOCATING ± 0°30'
	MACHINED ± 0°30'

FINISH

MATERIAL

CONTRACT NO. NAS7-72-C-0257

DWN	SEE NYERGES	7-3-73
CHK		7-3-73
ENGR		7-3-73
ELECSYS		
DSD		
OTHER		

DATA SYSTEMS — VAN NUYS, CALIF.

DWG NO.

RANDOM ACCESS MEMORY, 1024 X 4 X 4 - CIRCUIT CARD ASSEMBLY

SIZE	CODE IDENT NO.	DRAWING NO.
B	13973	PL 154413

SCALE NONE | WEIGHT | SHEET 1 OF 2

3-2800 (R-3 12/72)

CATEGORY II RELEASE DSD Release Date

PARTS LIST

Litton DATA SYSTEMS VAN NUYS, CALIF.

CONTRACT NUMBER DAAB07-72-C-0257 | CODE IDENT 13973 | PL 154413 | REVISION

TITLE RANDOM ACCESS MEMORY, 1024 X 4 X 4 - CIRCUIT CARD ASSEMBLY

SHEET 2

ITEM NO.	QTY REQD-CASH NO. -100	UNIT OF MEASURE	CODE IDENT	PART OR IDENTIFYING NUMBER	DRAWING OR DOCUMENT NUMBER	NOMENCLATURE OR DESCRIPTION	MATERIAL OR REF DES	UNIT WEIGHT	REF SYM	ZONE	LINE REV
1	1			154751		PRINTED WIRING BOARD					
2											
3											
4											
5	2			M39003/01-2268	MIL-C-39003/1	CAPACITOR, 3.3 UF, ±10%, 15 V	C1, 6				
6	4			M39014/01-1474	MIL-C-39014/1	CAPACITOR, 0.1 UF, ±20%, 50V	C2, 3, 4, 5				
7											
8											
9											
10	8			888995-0016		MED - 1024 BIT STATIC MOS RAM	U1 THRU U8				
11											
12											
13											
14	1			RLR07C103GM	MIL-R-39017/1	RESISTOR, 10K, ±2%, 1/4W	R1				
15											
16											
17											
18	AR				QQ-S-571	SOLDER	COMP Sn63 WRMAP2				

3-2275C (R-1 12 72)

(35mm)

Litton DATA SYSTEMS

ECO 35mm

ENGINEERING CHANGE ORDER

CONTROL NO.	NOTED
ECO NO.	NOTED
DOCUMENT TITLE	VARIOUS
DOCUMENT NO.	541410 & NOTED
PROJECTS AFFECTED	CCS-280, TACFIRE, TOS², PACAF, ~~[illegible]~~ TTC-39, DASC
ECR NO.	0-32972
OTHER DOCUMENTS AFFECTED	NONE
EFFECTIVITY	ALL PARTS FAB'D AFTER 5-31-74 OR SOONER
REASON FOR CHANGE	REPLACE OBSOLETE SOLDER CALLOUTS
	☐ FUNC. ☐ MECH.

DESCRIPTION OF CHANGE

ON THE PICTORIAL

1. DELETE ALL CALLOUTS, NOTES AND/OR PORTIONS OF NOTES WHICH REFERENCE LITTON SOLDER PROCESS SPECIFICATIONS AND/OR MILITARY SOLDER SPECIFICATIONS.

2. ADD THE FOLLOWING NOTE AS THE NEXT CONSECUTIVELY NUMBERED NOTE:

   SOLDER MATERIAL AND PROCESS PER 893817

ON THE PARTS LIST

1. DELETE ALL SOLDER, FLUX, AND SOLDER PROCESS SPECIFICATION LINE ITEMS.

2. DELETE ALL SOLDER PROCESS SPECIFICATIONS FROM THE PARTS LIST NOTES, AND REFERENCE INFORMATION DOCUMENT LIST.

3. ADD THE FOLLOWING ITEM TO THE REFERENCE INFORMATION AND DOCUMENTS LIST:

   ELECTRICAL AND ELECTRONIC SOLDERING 893817

REISSUED

Due to incorrect alpha on the following dwg.
6-13-74 [illegible]

DOC CONT ECO
154425 3 A1

SEE FOLLOWING SHEETS FOR NOTED DOCUMENTS

INTERCHANGEABILITY AFFECTED: YES ☐ NO ☒		CHANGE CLASSIFICATION: CLASS I ☐ CLASS II ☒ CLASS II ~~[illegible]~~ (RECORD) ☐	
PREPARED BY C.B. Shoblen	DATE 3/21/74	— FOR CHANGE BOARD ONLY —	— FOR MANUFACTURING ONLY — 21741
CHECKED M. Lipschutz	DATE 22MAR74	TAC / TOS² / DASC	PRODUCTION CUT-IN ALL PARTS FAB'D AFTER 5-31-74 OR SOONER
MECH/ /STRESS	DATE		DISPOSITION PARTS OR MATERIALS
ELECTRICAL APPROVAL	DATE	APPROVED CCS-280 / TTC-39 / PACAF	REWORK ☒ SCRAP ☐ USE AS IS ☐
PROGRAMS OFFICE APPROVAL	DATE	DATE 053174 / 5/30/74 / 5/31/74	APPROVED
ENGRG CHANGE CONTROL Al Sutton	DATE 5-31-74	ENGR DOC CONTROL Del Dillin	DATE 6-1-74 PAGE 1 OF 2

Litton DATA SYSTEMS

ECO

CONTINUATION SHEET

ENGINEERING CHANGE ORDER

CONTROL NO.	ECO NO.
NOTED	NOTED

DOCUMENT TITLE

DOCUMENT NO.: 541410 & NOTED

DESCRIPTION OF CHANGE

DOCUMENT NO.	CONT NO.	ECO NO.	DOCUMENT NO.	CONT NO.	ECO NO.	DOCUMENT NO.	CONT NO.	ECO NO.
154437	10	A6	154853	1	A1	~~161437~~		
154442	2	A2	154928	4	A4	~~161440~~		
154443	4	A4	154941	2	A2	583026	1	A1
154476	8	B7	154965	3	A3	583027	1	A1
154504	1	A1	154978	2	A2	583028	1	B1
154505	3	A3	154983	6	A6	583029	1	B1
154506	2	A2	154985	4	A4	583030	1	A1
154507	2	A2	154991	5	A5	583079	7	C1
154543	4	A4	154992	7	A7	583080	3	B2
154544	3	A3	154993	6	A5	583081	6	B1
154562	2	A2	154994	2	A2	583082	4	C1
154567	3	A3	~~161303~~			583083	3	B2
154568	3	A3	~~161308~~			583084	3	A2
154576	1	A1	~~161338~~			583085	1	A1
154577	1	A1	~~161340~~			583086	1	A1
154578	3	B2	~~161350~~			583087	1	A1
154579	3	A3	~~161400~~			583088	1	A1
154691	2	A2	~~161403~~			583089	1	A1
154692	2	A2	~~161406~~			583154	2	B1
154754	6	A6	~~161409~~			583155	2	B1
154757	2	A2	~~161412~~			583156	2	B1
154780	17	B15	~~161415~~			583158	2	B1
154839	9	B8	~~161418~~			583159	2	B1
154840	4	A4	~~165421~~			583176	3	A3
154843	11	A10	~~161424~~			583186	13	D2
154845	4	A4	~~161427~~			583196	10	A6

Litton DATA SYSTEMS

ENGINEERING CHANGE ORDER

PROGRAMS AFFECTED: TOS², TACFIRE

OTHER DOCUMENTS AFFECTED: NONE

REASON FOR CHANGE: COMPONENT DIM EXCEEDS MAX HEIGHT REQUIREMENT

ECP NO./PROGRAM

CATEGORY I RELEASE ☐ CATEGORY II RELEASE ☒

ECR NO. 0-75693

EFFECTIVITY: [illegible]

DOCUMENT NO. 154417 & PL

CONTROL NO. 2

ECO NO. A2

DOCUMENT TITLE: INPUT - OUTPUT — MCSB, CIRCUIT CARD ASSY

ADD DELE IS WAS	ITEM NO.	QTY REQD/ DASH NO.		CODE IDENT	PART OR IDENTIFYING NO.	DRAWING OR DOCUMENT NO.	NOMENCLATURE OR DESCRIPTION	MATERIAL OR REF DES	REF DES ADD	REF DES DELE	REF SYM

DESCRIPTION OF CHANGE

1) ON F/D ZONE 2C NOTE 7

7. MAXIMUM - - - - - - - IS .235 (WAS .20)

APPLICATION BLOCK
(ADD) TACFIRE

* parts built to date comply

PREPARED D. Cameron 14 NOV 74	CHANGE CLASSIFICATION CLASS I ☐ CLASS II ☑ CLASS II (MINOR) ☐	ENGRG CHANGE CONTROL DATE	PRODUCTION CUT-IN
CHECKED	APPROVED TAC 3PC TOS² DATE 11-9-74	APPROVED DATE 4DEC74	ENGRG DOCUMENT CONTROL S. Hayden 12-10-74
ENGINEERING 11-6-74	J. Rosa 11/27/74		MANUFACTURING 11/21/74
APPROVED			DISPOSITION PARTS OR MATERIALS USE AS IS ☐ SCRAP ☐ REWORK ☐ PER ERI ☐

S/N 101 & UP OF 154417

22476

SHEET 1 OF 1

3-94v REV. 6 (2/74)

E. M. C.

DATA SYSTEMS	ENGINEERING CHANGE ORDER	CONTROL NO. 2	ECO NO. A2
ECO	DOCUMENT TITLE RANDOM ACCESS MEMORY, 1024x4x4 BIT-CIRCUIT CARD ASSY	DOCUMENT NO. 154413 & PL	
SUBJECTS AFFECTED TOS2		ECR NO. 0-41219	
OTHER DOCUMENTS AFFECTED 154413-300(1)		EFFECTIVITY all using assys	
REASON FOR CHANGE TO PULL UP THE WRITE TO INSURE AGAINST ACCIDENTALLY WRITE IN RAM WHEN A PRIME POWER FAILURE OCCURS		☐ FUNC. ☑ MECH.	

DESCRIPTION OF CHANGE

1) IN PL, (ADD):

ITEM NO.	QTY -100	PART NO.	DOCUMENT NO.	DESCRIPTION	REF DES
X	1	RLR07C512GM	MIL-R-39017/1	RESISTOR, 5.1K, ±2%, 1/4W	R2

2) ON F/D, BETWEEN CONNECTOR PIN FEED THRU'S 12 & 26:

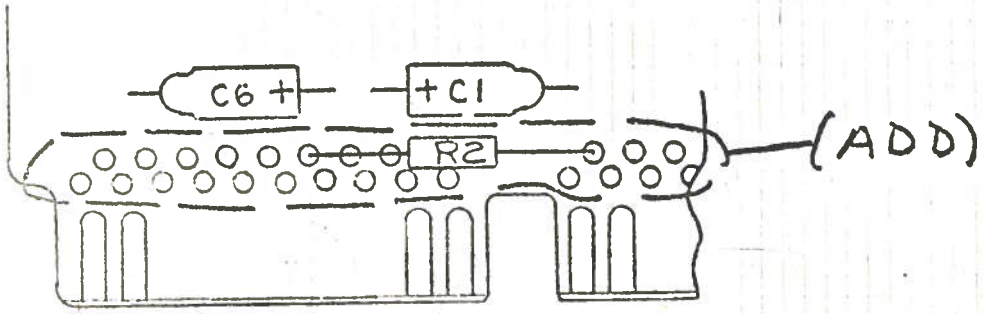

INTERCHANGEABILITY AFFECTED YES ☐ NO ☑

CHANGE CLASSIFICATION CLASS I ☐ CLASS II ☑ CLASS II (CORD) ☐

W. L. Cardozo	DATE 14JUN74	– FOR CHANGE BOARD ONLY –	– FOR MANUFACTURING ONLY –
Ritchey	DATE 18 June 74	JK RTW 6-18-74	PRODUCTION CUT-IN S/N 15 & UP OF 154413
STRESS	DATE 6-18-74	Sherman Rev 21 June 74	DISPOSITION PARTS OR MATERIALS
ELECTRICAL APPROVAL	DATE 6-18-74	APPROVED	REWORK ☑ SCRAP ☐ USE AS IS ☐
PROGRAMS	DATE	DATE 6/19/74	APPROVED 6/20/74
ENGINEERING CHANGE CONTROL Al Dutton	DATE 6-21-74	ENGR DOC CONTROL Del Gilliland	DATE 6-21-74 PAGE 1 OF 1

DATA 6-5 (8-72)

E. M. C.

DATA SYSTEMS

ENGINEERING CHANGE ORDER

ECO

CONTROL NO.	1
ECO NO.	A1
DOCUMENT TITLE	RANDOM ACCESS MEMORY, 1024 X 4 X 4 BIT - SCHEMATIC DIAGRAM
DOCUMENT NO.	154413-300
LCR NO.	O-41219
EFFECTIVITY	
☐ FUNC.	☐ MECH.

ECTS AFFECTED: TOS²

R DOCUMENTS ECTED: 154413 (2)

SON FOR CHANGE: TO PULL UP THE WRITE TO INSURE AGAINST ACCIDENTALLY WRITE IN RAM WHEN A PRIME POWER FAILURE OCCURS

CRIPTION OF CHANGE

) ON F/D:

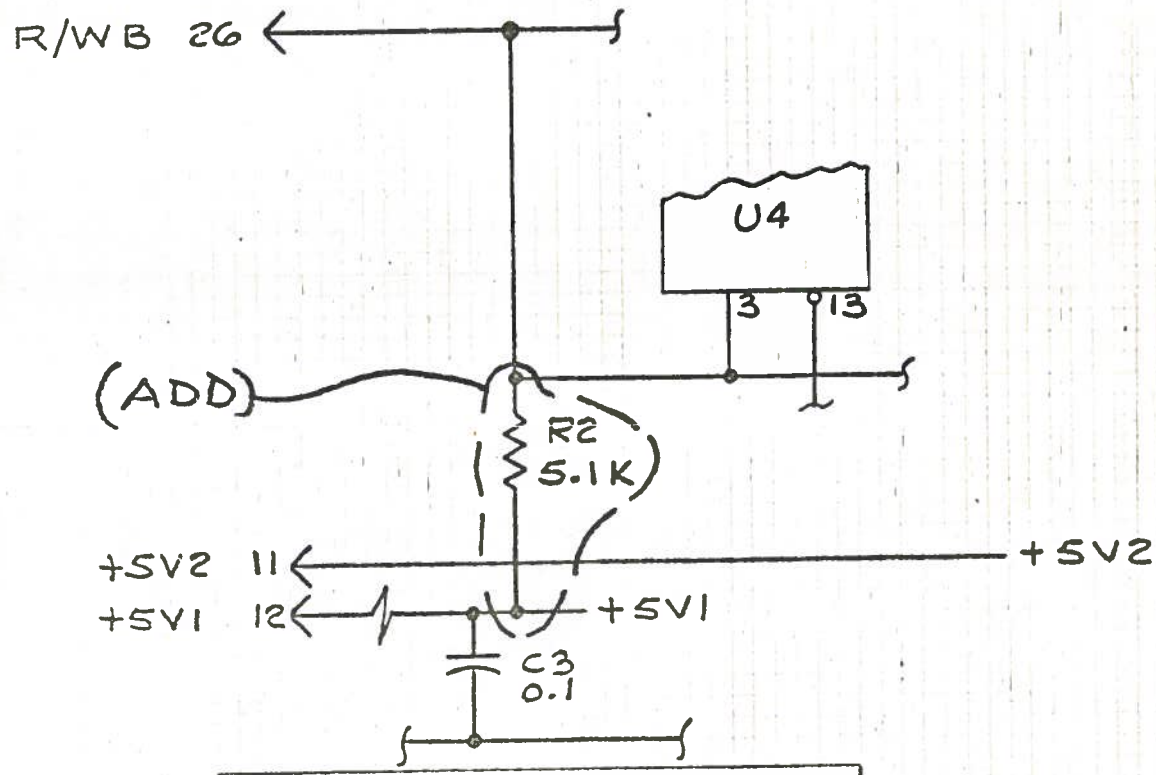

REFERENCE DESIGNATIONS	
LAST USED	DELETED
(R2)	

(WAS) R1

INTERCHANGEABILITY AFFECTED: YES ☐ NO ☑		CHANGE CLASSIFICATION: CLASS I ☐ CLASS II ☐ CLASS II (RECORD) ☑	
PARED BY: L. Valdez	DATE 14 JUN 74	– FOR CHANGE BOARD ONLY –	– FOR MANUFACTURING ONLY –
ES: M. Rierley	DATE 18 June 74	SK RAM 6-18-74 RPM	PRODUCTION CUT-IN
H: STRESS	DATE 6-18-74	J. Henderson 21 June 74	DISPOSITION PARTS OR MATERIALS
CTRICAL PROVAL: C. Mayer	DATE 6-19-74	APPROVED: M. Ring	REWORK ☐ SCRAP ☐ USE AS IS ☐
GRAMS ICE APPROVAL	DATE	DATE 6/19/74	APPROVED: [illegible] 6-21-74
RG CHANGE TROL: Al Sutton	DATE 6-21-74	ENGR DOC CONTROL: [illegible]	DATE 6-21-74 PAGE 1 OF 1

21815

R-5 (8-73)

Litton DATA SYSTEMS	Test Specification	No. 154413-720
Contract No. DAAB07-72-C-0257	UNIT TITLE RANDOM ACCESS MEMORY (RAM) CARD	
CODE IDENT NO. 13973	ASSY DWG. 154413-100 SCHEMATIC 154413-300	

ORIGINATOR	Pinkham	8-26-74			
DESIGN ENG.	PINKHAM				
ENG. APPROVAL	O. Morgan	154097A		[illegible]	9/5/74

REV.	DATE	ECO No.	DESCRIPTION	ORIG.	ENG.
A			INCORPORATED ECO A1 DIRECT DWG CHG	3 JAN 75 R.T. Helm	
B	6-18-75		Incorporated ECO B1 Direct Drawing Change	[illegible] 18 June 75	[illegible]

CURRENT REVISION
including all changes as of
JUN 3 - 1976
ENGRG. DATA CONTROL

DSD RELEASE DATE 7-10-75
CATEGORY II RELEASE

3-494 REV. 2 (10/73)

Specification No. 154413-340

REV	DATE	BY	REVISION DESCRIPTION	APPROVED BY
			INITIAL RELEASE	

1.0 DESCRIPTION

The Random Access Memory (RAM) Card (154413) is one of eight cards that make up the Central logic of the Communication Control Unit (CCU). The RAM card provides 1024 x 8 bits of random access (read/write) memory; which is used as a scratch pad (temporary storage of data being used in computations), as well as storage of the system status. Because this type of memory is volatile, the CCU provides a back up battery for the RAM plus (5) volts in case of a temporary power failure.

2.0 GENERAL

2.1 All tolerances ±5% unless otherwise specified.

2.2 All tests shall be performed at prevailing factory or laboratory atmospheric conditions.

2.3 Output Logic Levels:

Logic 1 = HIGH = +3.75 ± 1.25 VDC

Logic 0 = LOW = +0.45 ± 0.45 VDC

2.4 Input Logic Levels

Logic 1 = HIGH = +3.50 ± 1.50 VDC

Logic 0 = LOW = +0.35 ± 0.35 VDC

2.5 Connect a 5,100 ohm pull-up resistor to +5 VDC to each of the following pins for all tests: 43, 41, 42, 44, 5, 4, 17, 19.

TEST SPECIFICATION

CONTINUATION SHEET

NO. 154413-720
REV. B
PAGE 3

3.0 REQUIREMENTS

TEST NO.	INPUT	CONN PIN	CONDITIONS	CONN PIN	OUTPUT
3.1	Initial Conditions				
	+5 VDC	11, 12			
	+5 VDC Return	1,2,31,32			
	Write Strobe	7,26	(See Figure 1)		
3.2	RAM Read/Write				
3.2.1	Chip enable	10, 30	Ground		
	A9	28			
	A8	8			
	A7	6			
	A6	20			
	A5	25			
	A4	34			
	A3	33			
	A2	29			
	A1	27			
	A0	38			
	Input as shown in Table 1				
	D7	39		43	D7
	D6	40		41	D6
	D5	45		42	D5
	D4	37		44	D4
	D3	14		5	D3
	D2	3		4	D2
	D1	16		17	D1
	D0	18		19	D0
	Input as shown in Table 2		Step through Table 2 for each step in Table 1		As shown in Table 2

TEST SPECIFICATION

CONTINUATION SHEET

NO. 154413-720
REV. B
PAGE 4

TEST NO.	INPUT	CONN PIN	CONDITIONS	CONN PIN	OUTPUT
3.2.2	Chip Enable	10, 30	+5 VDC		
				43	D7
				41	D6
				42	D5
				44	D4
				5	D3
				4	D2
				17	D1
				19	D0
					Output should be high.

TABLE 1

ADDRESS INPUT

Pin Number	28 A9	8 A8	6 A7	20 A6	25 A5	34 A4	33 A3	29 A2	27 A1	38 A0
	0	0	0	0	0	0	0	0	0	0
	0	0	0	0	0	0	0	0	0	1
	0	0	0	0	0	0	0	0	1	0
	0	0	0	0	0	0	0	0	1	1
	0	0	0	0	0	0	0	1	0	0
	0	0	0	0	0	0	0	1	0	1
	0	0	0	0	0	0	0	1	1	0
	0	0	0	0	0	0	0	1	1	1
	0	0	0	0	0	0	1	0	0	0
	0	0	0	0	0	0	1	0	0	1
	0	0	0	0	0	0	1	0	1	0
	0	0	0	0	0	0	1	0	1	1
	0	0	0	0	0	0	1	1	0	0
	0	0	0	0	0	0	1	1	0	1
	0	0	0	0	0	0	1	1	1	0
	0	0	0	0	0	0	1	1	1	1
	0	0	0	0	0	1	0	0	0	0
	0	0	0	0	0	1	0	0	0	1
	0	0	0	0	0	1	0	0	1	0
	0	0	0	0	0	1	0	0	1	1
	0	0	0	0	0	1	0	1	0	0
	0	0	0	0	0	1	0	1	0	1
	0	0	0	0	0	1	0	1	1	0
	0	0	0	0	0	1	0	1	1	1
	0	0	0	0	0	1	1	0	0	0
	0	0	0	0	0	1	1	0	0	1
	0	0	0	0	0	1	1	0	1	0
	0	0	0	0	0	1	1	0	1	1
	0	0	0	0	0	1	1	1	0	0
	0	0	0	0	0	1	1	1	0	1
	0	0	0	0	0	1	1	1	1	0
	0	0	0	0	0	1	1	1	1	1

TABLE 2

	DATA INPUT								DATA OUTPUT							
Pin Number	39	40	45	37	14	3	16	18	43	41	42	44	5	4	17	19
	D7	D6	D5	D4	D3	D2	D1	DO	D7	D6	D5	D4	D3	D2	D1	DO
	0	0	0	0	0	0	0	1	0	0	0	0	0	0	0	1
	0	0	0	0	0	0	1	0	0	0	0	0	0	0	1	0
	0	0	0	0	0	1	0	0	0	0	0	0	0	1	0	0
	0	0	0	0	1	0	0	0	0	0	0	0	1	0	0	0
	0	0	0	1	0	0	0	0	0	0	0	1	0	0	0	0
	0	0	1	0	0	0	0	0	0	0	1	0	0	0	0	0
	0	1	0	0	0	0	0	0	0	1	0	0	0	0	0	0
	1	0	0	0	0	0	0	0	1	0	0	0	0	0	0	0
	0	0	0	0	0	0	0	0	0	0	0	0	0	0	0	0

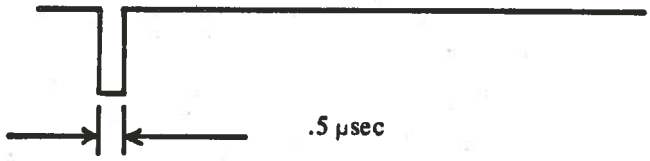

Figure 1.