ESCON

INSTALLATION INSTRUCTIONS

MODEL E-A

TYPEWRITER MAGNET ASSEMBLIES

VOLUME 1 OF 2

INSTRUCTIONS

Revised 2/28/80

ESCON PRODUCTS, INCORPORATED

12919 ALCOSTA BOULEVARD

SAN RAMON, CALIFORNIA, 94583

i) GENERAL

Read these instructions all the way through before starting work. It is a good idea to check off the instructions as they are completed. Follow the instructions in the order stated; you can get into trouble if you don't do the steps in the proper sequence.

Work in a clean, well-lighted place.
Use a small tray or box to hold parts removed.
If you drop a part into the mechanism, remove it before proceeding further. Otherwise, it may damage the mechanism when the machine is run. Parts can sometimes be shaken out by picking up the mechanism and turning it over.
Be sure that the power cord is not plugged in.

The following tools are recommended:

- Soldering iron with 1/8-inch tip
- Long-nosed pliers
- Screwdrivers with 1/8 and 3/16-inch blades
- 1/4-inch nut driver
- Tweezers
- 3/16-inch open-end wrench or another pliers
- Diagonal cutters and wire strippers
- Flashlight
- Electrical tape
- Screw-holding screwdriver

Note: Verify Parts List and read section iii before proceeding.

ii) PARTS LIST

Select and Function Magnet Assembly (Figure 1)
Shift Magnet Assembly (Figure 1)
Printed Circuit Board with Cable (Figure 13)
AC Power Cord
Shift Fork (Clevis) - modified IBM part (C, Figure 11)
3 Large (1/4-20) screws, (E and F, Figure 4
2-64 Nuts (E, Figure 11)
6/32 Self-tapping screw (C, Figure 4)
6/32 Flat-head screw (B, Figure 11)
3/16" Shrink tubing
1/2" Shrink tubing
4/40 Binderhead screws
Plastic Insulator Sheets
Waxed string
Spade lug
Springs
IBM clips
Retaining rings

iii) MACHINE MODELS AND DESIGN VARIATIONS

The ESCON equipment covered by these instructions fits all IBM office type Selectrics, with the exception of very early models of the Selectric I. If you feel you may have one of these typewriters, it may be verified by opening the typewriter case (described in Section 1). If there is a screw and spring assembly attached to hole C (Figure 4), the mechanical assembly will not fit in the typewriter without modification. Contact ESCON for assistance.

The three IBM models are the Selectric I, Selectric II, and the Selectric III. The Selectric I has a curved case, the Selectric II and III have angular cases. If your machine has a manual velocity control, contact the factory so that ESCON can provide you with a slightly different link arm to accommodate this feature.

Design changes have been made from time to time in both models. Some of these changes affect the installation as will be described in the appropriate section in this manual.

INSTALLATION STEPS

1. PRE-INSTALLATION PREPARATION

1.1 The ESCON typewriter kit is shipped in two sub-assemblies as shown in Figure 1. Before starting the installation, separate the large sub-assembly into three pieces by removing the four screws, A and B. Also remove the screw C and the clip D, Figure 2. There are now four sub-assemblies as shown in Figure 2.

1.2 Note that the select levers are tied with string. This is to assist in assembly. Do not remove the string until instructed to.

1.3 When the typewriter mechanism is in the vertical position, the directions referred to as up-down and left-right assume you are facing the bottom of the machine. Behind means farther away from you and in front means closer to you.

2. REMOVING MECHANISM FROM CASE

2.1 Lift the carriage cover, Figure 3.

2.2 Remove the platen by pressing down on the levers at each end of the platen and lifting the platen out of the case.

2.3 Remove the metal tray which is under the platen.

2.4 Lift the left and right margin stop levers as shown in A, Figure 3, so they point upward or to the rear.

2.5 Lift the carriage position-indicator pointer.

2.6 Note the two levers inside the case at both sides of the opening as shown in B, Figure 3. Push the ends of these levers toward the front as

far as they will go. These levers lock the upper part of the case to the base. Early models did not have these levers. If they are missing on your machine, look for a screw at the center rear of the case. Unscrew this screw to release the upper part of the case.

2.7 Lift the upper part of the case off the base and set it aside.

2.8 Note the lever at the left side of the mechanism below the keyboard as shown in C, Figure 3. This lever locks the mechanism to the base. Move the end of this lever to the front as far as it will go. On early machines, the mechanism is attached to the base by screws through two "outriggers" on each side. Remove these screws if you have one of these machines.

2.9 Grasp the mechanism by the side plates of the keyboard, being careful not to bend any of the parts. Lift the front of the mechanism about an inch and draw the mechanism forward to the ends of the guides. Then tilt the front of the mechanism up and toward the rear until it stands in the upright position as shown in Figure 4. (The mechanism can sometimes be drawn forward more easily if the front end is moved slightly from side to side until the rear supports come out of the rubber blocks.)

More recent model machines have guides at the rear of the base to support the mechanism in the upright position. Early models do not have these guides but the mechanism can rest on end on the base without them. Do not rest the machine on the rubber blocks.

3. SUPPORT BRACKET REMOVAL

3.1 Note the right-hand support bracket as shown in B, Figure 4. With a lead pencil draw a line on the side frame completely around the bracket, as shown in Figure 5, to permit its replacement in the same position.

3.2 Remove the right-hand support bracket by removing the two hex-head screws. This can be done conveniently with a 1/4-inch nut driver.

4. IDENTIFICATION OF PARTS

Note the horizontal rod connected to the AC power switch as shown in A, Figure 6. This is called the switch interlock rod. It locks the keyboard when the power switch is off. Also note the smaller diameter horizontal rod as shown in E, Figure 6, which extends from the right side frame to the mechanism at the center. Rod E is the shift interlock rod. It prevents printing during a shift. Finally, note if there is a vertical rod, I, the return interlock rod, which contacts the shift interlock rod. The return interlock rod prevents a print operation during carriage return. It is not found on early machines and there are early and late designs of the rod itself.

5. REMOVAL OF RETURN INTERLOCK ROD (I, Figure 6)

5.1 If your machine has no return interlock rod, I, Figure 6, skip to section 6.

5.2 If the rod is of the early design (as shown in A, Figure 7), disengage the clip, J, Figure 6, by sliding it off the rod and removing the rod from the hole in the actuating lever (not shown in the figure). This can be done with your fingers.

5.3 If the rod is of the more recent design (as shown in B, Figure 7), remove the rod by spreading the fork, J, at its lower end. This can be done by inserting a screwdriver blade inside the fork and twisting the screwdriver. Do not spread the fork more than necessary to disengage it from the lever. The lever should NOT be forced either up or down when removing or reinstalling the interlock rod; it is easy to foul the mechanism this way.

5.4 The return interlock rod is not necessary for typewriter operation, and may be discarded if desired.

6. REMOVAL OF SWITCH INTERLOCK ROD (A, Figure 6)

6.1 (Refer to Figure 6). Unhook the end of the coil spring, B, from the switch interlock rod, leaving the spring connected to its position in the typewriter (hooked to the keyboard lock interposer). On early models, there is a clevis-and-eyehook arangement instead of coil spring B. To remove this arrangement, carefully spread the blades of the clevis apart using a screwdriver, and unhook the clevis from the interposer.

6.2 (Refer to Figure 8). Note the link rod, A, between the lever attached to the switch key, E, and the clamp C (also shown at C, Figure 6) attached to the right-hand end of the switch interlock rod. Operate the switch key, E, a few times to observe the motion.

6.3 (Refer to Figure 8). Scribe a mark on the switch lever at the hole in which the fork, B, is attached, to assure correct reassembly. Remove the link rod, A, from the switch lever by spreading the fork, B, with a screwdriver. Do not overspread the fork (clevis).

6.4 Loosen the clamp screw, D, Figure 8, and remove the clamp, C, from the switch interlock rod shown in Figure 6.

6.5 Remove the left end of the switch interlock rod from its socket by pushing the rod to the right. Be careful not to distort the rod as you remove it.

6.6 If the rod has a spring clip, D, Figure 6, used to guide the return interlock rod, remove this clip. This can be done with your fingers.

7. REMOVAL OF SHIFT INTERLOCK ROD (E, Figure 6)

7.1 (Refer to Figure 6) If there is a coil spring, G, attached to the clip at the left end of the rod, remove it. Use tweezers to remove the spring.

7.2 Remove the spring clip, F, Figure 6, just inside the right side frame from the rod. Hold the clip with your fingers while you pry it off so it doesn't get lost. (A spare is included with the unit in case the original is lost.)

7.3 If your machine has a spring clip, H, on the shift interlock rod, E, remove and discard. This can be removed with your fingers.

7.4 Slide the shift interlock rod, E, through the right side frame until the clip at its left end is against the frame. (On early machines, the shift interlock rod goes through a hole in the shift lever outside the frame. On later machines, the rod rests against the lever. If the rod goes through a hole in the lever, the rod must be moved first to the right to disengage its left end, then to the left to disengage its right end, and then to the right.)

8. INSTALLING THE SELECT LEVER ASSEMBLY (F, Figure 2)

8.1 Remove the two screws, D, Figure 4.

Note the dimension, X, of the switch interlock rod at the top of Figure 6. If X is approximately 3 inches, go to step 8.2. If X is approximately 2 inches, it is not necessary to thread the rod through the lever assembly at this time. Go to step 8.3 and install the switch interlock rod after step 8.4.

8.2 Thread the right end of the switch interlock rod through the front of the select lever assembly between the aluminum bar and the print

lever as shown at the upper left of Figure 9. Be sure the spring, B, Figure 6, is still on the rod.

8.3 Place the select lever assembly on the machine while guiding the switch interlock rod through its hole in the right side frame. The hook, A, Figure 9, must be placed between the third and fourth interposers from the right and above the nickel-plated horizontal print rod during this operation. Some newer models have a black print rod in this position.

8.4 When the assembly is in place, insert the two screws, D, Figure 4, leaving them about two or three turns loose.

8.5 Engage the left end of the switch interlock rod by bending it slightly as you did to remove it (refer to Figure 6)

8.6 Hook the spring, B, Figure 6 (or the clevis and eyehook) to the interposer behind it, from which it was originally removed.

8.7 While pressing the switch interlock rod as far to the left as possible, press the clip or clips, K, Figure 6, against the right side frame. Check that the rod has little or no end play. It is extremely important this be properly accomplished to avoid damage to the typewriter.

8.8 Engage the hook, A, Figure 9, with the print rod by pulling the rod toward you while pushing the hook into place.

8.9 Remove the string used to hold the select levers in place during assembly. The levers should all move freely. If not, check for parts binding against each other. If this occurs, the assembly is not in the proper position and must be removed and replaced.

9. INSTALLING THE FUNCTION MAGNET ASSEMBLY (G, Figure 2)

9.1 Note the hole in the aluminum bar, C, Figure 4. If it is not threaded, screw the self-tapping screw furnished with the kit into the hole and then remove it. (The self-tapping screw can be identified by a slot cut lenghthwish through its threads). On very early models, hole C has a bracket attached to it for a space bar spring assembly. A typewriter with one of these brackets will not accept an ESCON mechanical unit without modification. This modification can be done by your local typewriter serviceman. Contact ESCON for details.

9.2 On early Selectric II's with an EXPress key, there is a lever attached to the express mechanism that presses the backspace latch. This lever will prevent installation of the function magnet assembly. Removing the lever will solve the problem. Removal has no adverse effects on the typewriter, and later models do not include the lever.

9.3 Set the function magnet sub-assembly in place, guiding the return lever, A, Figure 10, between the two function latches as shown in the figure. These are the levers operated by the BACKSPACE and RETURN keys. If necessary, lift the key lever as shown in the figure to permit the return lever to pass behind the key lever and between the two function latches. Guide the print plunger attached to the select lever sub-assembly into the left hand function magnet. The wires should pass around the right side of the solenoids.

9.4 Insert the self-tapping screw, C, Figure 4, and leave it about two to three turns loose.

9.5 When this sub-assembly is in place, all three levers will be free. If there seems to be any interference, remove the assembly and re-install it. The sub-assembly must not be forced into place. If that is done, parts may be bent and the proper adjustment lost.

9.6 Make certain that the wires from the function assembly are not pinched between the assembly and the typewriter frame.

10. REPLACEMENT OF SHIFT INTERLOCK ROD (E, Figure 6)

10.1 Slide the shift interlock rod (E, Figure 6) to the left from the right side of the frame and engage its left end in the support bracket from which it was removed. Some manipulation will be necessary. If the screw in hole C, Figure 4, is too tight at this time, the function magnet assembly may hinder the rod's travel. On the early machines, see that the rod enters the hole in the shift lever outside the side frame. On recent model machines, the right end of the rod is behind the shift lever (i.e. the side towards the keyboard).

10.2 Replace the spring clip (F, Figure 6) on the rod and holding the rod to the left push the clip against the right side frame.

10.3 If there was a coil spring, G, attached to the clip at the left end of the rod, replace the spring.

10.4 Check the rod to make sure it rotates freely, without binding. Some adjustment of the spring clip, F, may be necessary.

10.5 Replace the clamp (C, Figures 6 and 8) at the right end of the switch interlock rod outside the right side frame, leaving the clamp screw (D, Figure 8) loose. Replace the link rod (A, Figure 8) in the holes from which it was removed.

10.6 Place the switch in the "on" position and note that the switch interlock rod is in its lowest position, resting against the end of the notch in the function magnet support. Place the clamp even with the end of the switch interlock rod. Tighten the clamp screw.

10.7 Move the switch on and off. The switch should snap on an off and the link rod should not touch other parts. If necessary, move the clip on the interlock rod to obtain this condition.

11. REPLACEMENT OF RETURN INTERLOCK ROD (I, Figure 6)

11.1 If your machine had a vertical return interlock rod of the early design (A, Figure 7), discard the rod and skip to section 12.

11.2 The return interlock rod is used solely to prevent typing during a carriage return. If you experience difficulty with the carriage return mechanism during testing, it may be due to mechanical interference with this rod. Removal of this rod will not harm the typewriter in any way, and is the suggested method.

11.3 Slide the rod upward in back of the mechanism frame, and enter its top end in the hole in the prong (E, Figure 2) extending from the select lever assembly. Sometimes prong E must be bent slightly to be perpendicular to the return interlock rod. An indication that this needs to be done is if, with the motor running, the carriage moves to the far right when the RETURN key is depressed.

11.4 Spread the fork (J, Figure 6) at the lower end of the rod and engage the pin in the hole in the actuating lever. Do not spread the fork more than necessary.

11.5 Adjust the butterfly at the top of the link, if necessary, to just clear the horizontal shift interlock rod. Upward motion of the link must rotate the shift interlock rod slightly. The butterfly clip can be moved by pinching the "wings" together, and sliding it along the rod.

12. INSTALLING THE SHIFT MAGNET ASSEMBLY (H, Figure 2)

12.1 Remove the screw, B, Figure 11.

12.2 Set the magnet assembly in place. Be sure that the lip on the magnet bracket enters the square hole in the side frame.

12.3 Insert the flat-head screw furnished with the mechanical interface in place of the screw B, Figure 11, which was removed. Tighten the screw while checking that the magnet bracket comes flat against the side frame.

12.4 Check to make sure the coil spring (A, Figure 11) is still attached to the index key. An extra spring is included with the kit in case the old one is lost.

12.5 Thread the magnet wires through the square hole in the side frame, being certain that the wires do not interfere with any mechanical assemblies.

12.6 Remove the fork (C, Figure 11) by spreading it with a screwdriver to disengage the pin from the clamp D. Unscrew the fork from the rod.

12.7 Screw nuts E onto the rod to the end of the threads. Lock the nuts by tightening them against each other with light finger pressure on an open-end wrench. Too much force will strip the thread in these small nuts.

12.8 Place the fork (C, Figure 11) furnished with the system on the end of the rod and engage its pin in the clamp D. Make sure this new fork slides on the rod without grabbing the threads.

12.9 Insert the shift rod through the top slot in the forked lever, as shown in Figure 11.

12.10 Combine the function magnet wires and the shift magnet wires into one bundle. Slide the 6-inch piece of shrink tubing over the bundle to a position one inch from the return magnet. Be careful to not lose the markers at the ends of the wires.

13. INSTALLING THE SELECT MAGNET ASSEMBLY (Figure 2)

13.1 There may be a support screw at E, Figure 4. If there is, remove it.

13.2 Thread the wires from the function and shift magnets through the sleeve attached to the select magnets.

13.3 Slide the short piece of shrink tubing over the wires. Pass a piece of waxed string, about 2 feet long, through the tube. Pass the upper end of the string through the hole C, Figure 14, in the select magnet bracket. Pull about a foot of string through the hole so that it doesn't pull out while setting the magnet assembly in place.

13.4 Pass all the wires behind the frame at the left of the select magnet assembly as shown in Figure 14. The lower end of the waxed string should also pass behind the frame.

13.5 Set the magnet assembly in place, while guiding the plungers into the magnets. If the shift interlock rod is bent at various angles along its length, the left support bracket (I, Figure 2) of the magnet assembly goes in front of the horizontal shift interlock rod, and the right support bracket (J, Figure 2) goes behind the rod. If the shift interlock rod is almost straight, both support brackets go in front of the rod.

13.6 Replace the four screws, A and B, Figure 1, that fasten the assemblies together. Leave the screws slightly loose.

13.7 Insert one of the large screws furnished with the system at E, Figure 4. Leave the screw slightly loose.

13.8 Attach the clip D, Figure 2, to hold the lower left corner of the assembly against the frame.

13.9 Tighten all screws on the entire select magnet assembly firmly, in the following order: screws A (Figures 1 and 2), screws B (Figures 1 and 2), screws D (Figure 4), screw C (Figure 4), screw E (Figure 4), and finally, the screw C on clip D (Figures 1 and 2).

13.10 Check that all the levers operate freely and that none are tight in their non-operated position. See that all the interlock rods operate. If binding occurs, it will be due to incorrect installation or damaged parts.

13.11 Tie the function and shift wire bundle to the side frame as at A, Figure 14, passing the string through the square hole and the large notch in the side frame.

13.12 Pull the string tight through hole C and notch D, figure 14, and the piece of shrink tubing, and tie it as shown in Figure 14. This will hold the tube against the typewriter frame, out of the way of the mechanism.

14. WIRING

14.1 Bring the 14 wires from the magnets through the opening in the frame, B, Figure 14.

14.2 Reference positioning of the printed circuit board is illustrated in Figure 13. The upper left corner of the board contains the three rows of soldering pads. The upper row includes the common bus. The

four white wires from the solenoids will connect to this. The middle row includes pads for an additional common wire, R5, R2, T1, Print and Return. The bottom row includes pads for another common wire, R1, R2A, T2, Space and Shift. Pads for the optional Tab and Backspace solenoids are included centrally on the board.

14.3 Refer to Figure 12. Drape the ribbon cable over the typewriter so the PC board is upside down, with the back facing you. The wires will be inserted into the back and soldered on the front, one by one, so some manipulation of the board to expose both sides will be necessary.

14.4 The four white wires will be soldered first. Gently pull the white wires horizontally out from the typewriter, towards you, and cut them 1 3/8 inches from the main frame of the typewriter. Strip the wires 1/4 inch, being careful not to pull too hard on the wires. Insert the wires, one by one, into the four right-hand pads on the common bus, and solder them on the front side. Clip the ends close to the board.

14.5 Repeat the process for the ten black wires, being careful to cut, strip, and solder them one at a time so as to keep track of the labels. Do the black wires in the following order, with the indicated lengths:

Length 1 1/2 inches: Return, Print, T1, R2, R5
Length 1 5/8 inches: Shift, Space, T2, R2A, R1

14.6 Tightly wrap electrical tape around the short bundle between the typewriter and the PC board.

14.7 Position the insulating sheets on either side of the PC board. Wrap electrical tape around the board and plastic to hold the insulator in place on the vertical leg of the board.

14.8 Drop the PC board down into its operating position as shown in Figure 14. Pass the ribbon cable under and behind the typewriter.

14.9 Line up holes A and B, Figure 13, with the corresponding holes on the typewriter frame (F, Figure 4). Insert the remaining two large screws supplied with the kit and tighten gently. Do not tighten firmly onto the fragile PC board.

14.10 Be certain that the bundle does not interfere with the motor belt or other mechanism. If necessary, tie the wires to the frame with waxed string. The finished installation should look like Figure 14.

14.11 Move the mechanism back to its horizontal position. Push it back onto its rear supports. Turn the typewriter so the back of the machine is facing you. In this position the motor is to your right and the ribbon cable exits slightly to the left of the opening in the base.

14.12 Refer to Figure 15. Fold the ribbon cable onto itself, close to the typewriter frame, and 90 degrees to the right. Fold it once again under itself so it forms a loop and exits the opening in the base.

14.13 Refer to Figure 15. Remove a small amount of insulation from the existing wires between the typewriter power switch and the motor about 2 inches to the right of the switch, being careful not to cut or damage the wires.

14.14 With the special power cord supplied with the kit, remove the outer sheathing 2 inches from the cut end.

14.15 If the typewriter cord uses a third wire for grounding the typewriter frame, go to step 14.16. If the typewriter uses only a two-wire system, skip step 14.16 and proceed with step 14.17.

14.16 Strip the green wire on the supplied cord approximately 1/4 inch from the end. Solder or crimp the supplied spade lug onto this wire and attach it to the typewriter frame.

14.17 Strip the white and black wires on the supplied cord approximately 1/2 inch from the ends. (In some kits, these wires may be blue and brown.) Solder these to the existing motor wires where the insulation was removed. Tape the joints neatly and carefully with electrical tape. (On early machines, the motor switch is at the front, on the side of the keyboard. In this case, pass the wires to the switch through the oblong hole, E, Figure 14, in the select magnet bracket.)

14.18 Pass all cables through the plastic grille at the rear of the machine. The ribbon cable will have to be rolled to fit.

14.19 Tie the interface power cord and the ribbon cable to the typewriter power cord inside the typewriter, with waxed string (The ribbon cable may be tied in the rolled position). Be certain that the cables clear the motor counter balance.

15. After performing the electrical check and mechanical adjustments (Sections 16 through 20), replace the mounting foot (B, Figure 5). Position it according to the pencil marks and tighten the screws firmly. Replace the case by following steps 2.1 through 2.9 in reverse order.

16. ELECTRICAL CHECK

16.1 Using an ohmmeter, read the resistance between the common bus and the pads for R5, R1, R2, R2A, T1, T2, Print, Space, and Return. All should read approximately 70 - 75 ohms.

16.2 Read the resistance between the common bus and the Shift pad. This should read approximately 130 ohms.

16.3 VERY IMPORTANT - Read the resistance between the common bus and the typewriter frame. This should show an open circuit. If there is any continuity, one of the magnet wires is probably shorted to the frame. DO NOT energize the solenoids until the problem is fixed.

17. MAGNET SUPPLY REQUIREMENTS

17.1 The magnet voltage is approximately 32 volts.

17.2 Driver transistors MUST be protected by diodes against reverse voltage spikes. Early versions of the Universal Interface included these diodes inside the power supply section. The recent design includes the diodes on the typewriter PC board. Under no circumstances should you try to interface a typewriter with the former-style installation (without ribbon cable) to a Universal Interface with a card-edge connector, without first installing these protective diodes.

17.3 Voltage must not be applied to any magnet before the typewriter motor comes up to speed. This is provided for in the Universal Interface.

18. MECHANICAL ADJUSTMENTS

18.1 After installation of the solenoid assembly, it must be adjusted by bending the wire connecting links. Adjustment of the Print, Space, Return, and Shift linkage must be done with the motor running. Adjustment of the Select linkage may be done either with or without the motor running.

The adjustments will be described in a left-to-right fashion, i.e. starting with R5 and ending with Shift.

Be sure to carefully perform the Electrical Check (Section 16) before plugging the typewriter in.

Before beginning adjustment, operate the magnet plungers by hand and observe the motions of the mechanism.

18.2 R5 SELECT MAGNET

The R5 latch, when activated, allows rotation of the type ball five character positions in the negative direction. This latch is active when lifted 1/32 inch above a small round disk (Figures 16e and 16f). To manually activate the latch, press down on the R5 magnet plunger with your finger. If the latch clearance distance is not approximately 1/32 inch, bend the wire connecting link with two pairs of longnose pliers: legs further apart (angle wider) to decrease travel, and legs closer together (angle more acute) to increase travel (Figure 17a).

After this adjustment is made, the clearance stop must be bent with pliers to provide pre-travel clearance (Figure 17b). This pre-travel must be barely perceptible (about 1/64 inch), so that the linkage is slightly loose in the inactive state.

18.3 R1, R2, R2A, T1, T2 SELECT MAGNETS

The R1, R2, and R2A latches when activated, allow rotation of the type ball 1, 2, and again 2, character positions in the positive direction, respectively. When used in conjunction with each other and/or with R5, their rotation angles are summed. The T1 and T2 latches together determine one of four tilt angles to be selected.

These latches are active when lifted about 1/16 inch above the flat horizontal bar (Figures 16 a, b, and c). To manually activate a latch, press down on the respective magnet plunger with your fingers. If the latch clearance distance is not approximately 1/16 inch, bend the wire connecting link with two pairs of longnose pliers, as for R5: angle wider to decrease travel, and angle more acute to increase travel (Figure 17a). Repeat this for the other select latches. After this is completed, the character stops must be bent to provide pre-travel

clearance (Figure 17a). This pre-travel must be barely perceptible (about 1/64 inch) so that the linkage is slightly loose in the inactive state.

18.4 PRINT MAGNET

The ESCON print linkage pulls on the horizontal print bail with a hook, thus activating the print clutch and causing the type ball to tilt, rotate, and strike the platen. The space function is automatically activated by the typewriter mechanism after a print; therefore there is no need for the interface to send a space pulse after every print pulse.

The print linkage must be adjusted with the typewriter motor running. Push up on the plunger to manually activate the print mechanism. As on the select magnets, bend the wire link with two pair of longnose pliers: angle wider to decrease action and angle more acute to increase action. Adjust the link so that when pressing the plunger in, one definite print cycle is completed (ball strikes the platen once). When this adjustment is achieved, bend the angle slightly more acute, so that the mechanism tends to do multiple prints. Bend the stop under the link with longnose pliers to give a slight clearance when inactive. The clearance for the print linkage should be slightly greater than that for the other solenoids: about 1/32 inch.

18.5 SPACE AND RETURN MAGNETS

The space and return linkages activate the vertical latches as shown in Figure 10. Adjustment of these solenoids must be done with the motor running. The plunger travel of each of these solenoids must trip the latch and travel slightly beyond the trip point. The trip point should occur at about 1/32 inch travel of the plunger from the released position. The total travel should be about 1/16 inch. The amount of travel can be adjusted by first bending the wire links

connected to the plungers, and if this adjustment is not sufficient, the links behind the function magnet assembly. The adjustment of the latter links is the reverse of that for the other links: making the angle more acute decreases plunger motion. To decrease travel, carefully insert a screwdriver between the interposers from the keyboard side of the typewriter, and carefully press on the link. To increase travel, work from the bottom side of the typewriter, and bend the link more acute. When bending the links in this manner, be careful to apply minimum side force.

Excessive space or return travel will result in multiple spacing or multiple carriage returns when being pulsed by the interface. If multiple spacing or carriage returns appear in your output copy, this is one of the first places you should investigate.

If it is necessary to adjust the links with the typewriter motor off, the space and return latches can be reset by pressing upward on the levers as shown at the upper left of Figure 10.

18.6 SHIFT MAGNET

Unlike the other magnets, the shift magnet is held on continuously in upper case instead of being pulsed. Adjustment of the shift linkage must be done with the typewriter motor running. Two adjustments must be made.

First, the shift key must operate normally. When the key is depressed, a small motion of the key should occur before the shift to upper case occurs. Likewise, when the key is released, a small motion should also occur before the shift back to lower case. These two motions should have approximately the same amount of displacement. If they do not, readjust the clamp (D, Figure 11), until they do. Do not tilt the clamp so far back that the clamp nut touches the fork C. Otherwise, it will prevent the rod from sliding

freely inside the fork.

Secondly, the shift magnet link must be bent so that pressing the plunger in and releasing it will cause identical shift clutch motion as with the key. Bending the link angle more acute will increase plunger travel, and bending the link angle wider will decrease plunger travel.

There is no pre-travel clearance stop on the shift magnet.

19. FINAL ADJUSTMENTS

19.1 After the adjustments in section 18 have been completed, it will be necessary to connect the typewriter to a computer via the Universal Interface and test all of its functions thoroughly. Now is the time to fine-tune the mechanical unit.

19.2 Do not expect the typewriter to output perfect copy the first time it is connected, since every typewriter is different and the above-described adjustments are only approximate. It is a good idea to test and adjust the various functions of the typewriter one at a time, using copy that is appropriate for the particular function being tested (i.e. when testing and adjusting the space solenoid, send copy that is full of spaces in a varying yet predictable format. Columns of figures would be a good choice in most cases).

19.3 The most common place for errors to occur is in the select solenoids. If a particular select latch is not pulling in far enough, or is pulling in for too long of a delay, incorrect characters will be substituted for the correct ones. In diagnosing such a problem, it is necessary to know which of the latches is acting improperly. This can be determined by using the Selectric Bail Code Table (Figure 18). This table charts all 128 combinations of the six select bits (and shift), and shows which character will be printed for a particular combination. Note that some characters are selected by more than one combination.

Across the top, the combinations of R1, R2, and R2A are listed. Down the left side, the combinations of R5, T1, and T2 are listed. A "0" means the particular magnet is inactive (off) and a "1" means the magnet is active (on) for that character. Hence, for the letter "f" to be printed, R5, R2, and R2A will be on, and R1, T1, and T2 will be off. If an "f" was sent by the computer, and the typewriter printed a "v", the T1 latch was active when it shouldn't have been. Likewise, if an "f" was sent by the computer, and the typewriter printed "=", the R5 latch did not activate when it should have. Knowing how to use this table is very important in troubleshooting character substitutions.

20. MECHANICAL TROUBLESHOOTING

20.1 SYMPTOM: Misprints an occasional character.

CAUSE	REMEDY
a) Magnet not pulling in enough or magnet pulling in too much. This can be determined by referring to the Selectric Bail Code Table (Figure 18).	Bend appropriate ESCON link (R5, R1, R2, R2A, T1, T2), test, and repeat as required. See paragraphs 18.2 and 18.3.
b) Very occasionally, a spring under one of the keyboard interposers will become detached, and the problem will appear to be a magnet or latch adjustment.	Refit or replace spring.
c) On well-used, worn typewriters, an occasional latch spring (Fig. 16) may lose its tension and will thus need to be replaced.	Replace spring. Alternately, the old spring may be shortened to increase tension. Cut about 1/4 of its original length off, and reattach spring to the latch.
d) Latches sticking (see Figs 16d and 16g)	Refer service to a qualified Selectric serviceman.
e) Magnet links rubbing on foam on base of typewriter	Remove small square of foam with a sharp knife.
f) Bind in mechanism	Check that the links are not twisted and that connections between stamped parts and links make 90 degree bends. Check for burrs on brass shims pinched by retaining rings. All linkage should operate freely.

20.2 SYMPTOM: Severely misprints characters, or prints nonsense.

CAUSE	REMEDY
a) See 20.1 above	
b) Magnet or magnets stuck in "on" position when power is on.	
1) Black magnet wire shorted to typewriter frame	Perform electrical check (section 16) and repair short
2) Interface magnet driver leaking or shorted (D41D10).	Repair or return interface to ESCON for service.
c) One magnet not pulling in at all.	
1) Open in magnet wiring.	Perform electrical check (section 16) If magnet is open and wiring is correct (i.e. no wires switched or omitted) then problem is likely due to a bad winding. Magnet will need to be replaced.
2) Interface driver circuitry open.	Refer to interface manual or return interface to ESCON for service.
d) Print magnet linkage pulling in too much	Bend print link to reduce plunger travel (See section 18.4)
e) Short in print circuitry.	See 20-2b above
f) Bind in print mechanism.	See 20-1f above

20.3 SYMPTOM: Select solenoids activating, but typewriter is not printing, or does not print all characters.

CAUSE	REMEDY
a) Print magnet linkage not pulling in enough.	Bend Print link to increase plunger travel. (See section 18.4)
b) Open in Print circuitry	See 20.2c above.
c) Bind in Print mechanism	See 20.1f above.
d) Shift interlock rod mis-adjusted	Check that interlock lever (G, Figure 6) is not preventing the vertical print latch from activating.

20.4 SYMPTOM: Extra spaces

CAUSE	REMEDY
a) Space circuitry shorted.	See 20.2b above
b) Space linkage travels too far.	Readjust linkage as per paragraph 18.5.
c) Bind in space mechanism	See 20.1f above
d) If the typewriter space mechanism is particularly noisy and makes a ringing sound, this indicates a worn typewriter.	An optional function spring assembly kit (P/N 31A216) is available from ESCON at no charge. Contact the factory to order one of these kits.

20.5 SYMPTOM: Misses spaces or does not space at all.

CAUSE	REMEDY
a) Space circuitry open.	See 20.2c above.
b) Space linkage misadjusted.	Readjust linkage for more bell crank travel as per paragraph 18.5.
c) Bind in space mechanism.	See 20.1f above.
d) Too much side play on the space bell crank (Figure 17d) will cause it to miss the latch completely.	Using a pair of retaining-ring pliers, slide the bell crank retaining rings closer together on the shaft. Be careful not to open the retaining rings too far, as this may cause them to lose their tension. A few extra retaining rings are supplied with the ESCON kit.

20.6 SYMPTOM: No carriage return.

CAUSE	REMEDY
a) Return circuitry open.	See 20.2c above.
b) Return linkage misadjusted.	Readjust linkage for more bell crank travel as per paragraph 18.5 above.
c) Bind in return mechanism.	See 20.1f above.

20.7 SYMPTOM: Extra carriage returns.

CAUSE	REMEDY
a) Return circuitry shorted.	See 20.2b above.

20.7 (cont.) Extra carriage returns.

b) Return linkage misadjusted.	Readjust linkage for less bell crank travel as per paragraph 18.5.
c) Bind in return mechanism.	See 20.1f above.

20.8 SYMPTOM: No upper case characters.

CAUSE	REMEDY
a) Shift circuitry open.	See 20.2c above.
b) Small nuts on top of shift actuator rod omitted.	Fit nuts as per section 12, and adjust as per section 18.6.
c) Shift linkage misadjusted.	See section 18.6.

20.9 SYMPTOM: No lowercase characters.

CAUSE	REMEDY
a) Short in shift circuitry.	See 20.2b above.
b) Shift linkage misadjusted.	Adjust as per paragraph 18.6.
c) Some type ball fonts have no lowercase characters.	Change type ball.

20.10 SYMPTOM: No type action at all.

CAUSE	REMEDY
a) Interface power cord not connected.	Connect cord.

20.10 (cont.) No type action at all.

b) Interface fuse blown.	Replace fuse and investigate cause.
c) Interface DIP switches improperly configured.	Refer to Interface manual to configure DIP switches.
d) Open or shorted solenoid common lead.	Perform electrical check (Section 16) and repair.
e) Defective interface.	Power section may be checked by grounding base resistors of driver transistors by grounding the point furthest from the transistor. This should activate the respective solenoid. If the problem cannot be isolated, contact ESCON for assistance.

INSTRUCTION MANUAL

UNIVERSAL INTERFACE

SELECTRIC CONVERSION SYSTEM

EP-104

BOOK 2

ESCON PRODUCTS, INCORPORATED

12919 ALCOSTA BOULEVARD

SAN RAMON, CALIFORNIA, 94583

REVISED 3/23/81

TABLE OF CONTENTS

1.1 PRODUCT DESCRIPTION

2.1 SPECIFICATIONS

3.1 CONNECTION OF THE INTERFACE

3.2 SWITCHES AND OPTIONS

3.3 SERIAL CONFIGURATION

3.4 PARALLEL CONFIGURATION

4.1 TECHNICAL DESCRIPTION

5.1 TROUBLE-SHOOTING

6.1 SYSTEM CONTROL CODES

6.2 CUSTOMER EPROM CHANGES

APPENDIX A SCHEMATICS

APPENDIX B LIMITED WARRANTY

PRODUCT DESCRIPTION

Any IBM Selectric typewriter can be digitally-controlled from almost any source using the ESCON Universal Interface system. Each typed page is a perfect copy of the final draft you prepare at your computer terminal.

The ESCON U.I. is a mechanical/electronic link between the IBM Selectric and a computer. The ESCON unit allows connection of the typewriter as if it were a line printer. The ESCON EP-104 electronic interface is designed to work with the ESCON mechanical assembly, and provides the timing and drive circuits to run the typewriter. The EP-104 is microprocessor controlled and provides a number of functions.

Your computer may communicate with the ESCON system in either RS-232-level serial mode, or TTL-level parallel.

In the serial mode, eight standard baud rates are available, from 110 to 9600 baud. In parallel mode, the polarity of the strobe and handshake lines may be selected.

SPECIFICATIONS

Typewriter	IBM Selectric Models I,II, or III
Print rate	12.5 characters per second maximum
Data Input	RS-232 or TTL parallel
Connector	25 pin female EIA mounted on chassis
Serial Data Format	1 start, 8 data, 1 stop
Baud Rates	110,150,300,600,1200,2400,4800,9600
Serial Handshake	RTS, RTS inverted, or XON/XOFF
Parallel Handshake	Busy and/or Data Accepted
Buffer Size	96 characters
Physical Size	5" X 3" X 10"
Weight	Four pounds
Power Requirements	110 VAC, 100W maximum
	220 VAC available at extra charge

CONFIGURATION

3.1 Connection of the interface

Three cables are required to connect an ESCON interface: one between the DB25 connector and the computer, one ribbon cable connector from the typewriter to the exposed 26-pin printed circuit card edge, and a 3-wire AC connection from the typewriter's motor power to the EIS 3-prong connector on the ESCON interface chassis. Following the connection of the cables, configuration of the electronic system for your particular computer may be accomplished.

3.2 Switches and options

The printed circuit board inside the ESCON unit contains one 8-position DIP switch that is used to configure the interface. Removal of the six screws attaching the chassis cover will allow access to the PC board. Three of the individual switches are labeled "D" (for data) on the PC board and numbered 1,2, and 3 on the switch. One switch is labeled "P" on the board (for parallel) and numbered 5 on the switch. The last switch used is labeled "T" on the board (for test), and numbered 8 on the switch. None of the other individual switches are used. The functions of the active switches will be discussed in the following pages.

A three-position subminiature toggle switch is located on the outside of the chassis base. Its center position is the "run" mode, used for normal operation. When pressed down into its momentary position, and then released into the center position,

the ESCON unit will either enter the self-type or self-test modes, depending on the position of the "T" switch, #8.

When the "T" switch is placed in the on position, the unit is set up for its self-test function. This allows each of the solenoids in the mechanical unit to be individually tested for proper adjustment. The test begins with the shift solenoid, located on the far right side of the typewriter, and proceeds to the left through the solenoid assemblies, testing all functions. The position of switch #1 determines the speed at which the tests are performed. Each test is started with the #1 switch in the off position and #8 on. Pushing the toggle switch on the outside of the chassis down into its momentary position and then releasing it into the center position will cause the unit to enter the self-test mode. The shift solenoid will pulse at one second intervals. Placing the toggle switch in the upper position will halt the shift test. At this point adjustments can be made to the shift assembly. Pushing the toggle switch down again will begin the return test, and placing in its up position will halt the test. In this manner, all of the solenoids can be tested. The sequence of tests is as follows:

1. Shift Solenoid
2. Return Solenoid
3. Space (prints 10 spaces followed by an X)
4. Print (prints an underline)
5. T2 solenoid (B is printed)
6. T1 solenoid (W is printed)
7. R2A and R2 solenoids (+ is printed)
8. R2 solenoid (Q is printed)
9. R1 solenoid (Y is printed)
10. R5 and R1 solenoids (/ is printed)
11. Alternating bail test (US is printed)
12. Reset

These tests may be repeated as necessary by restarting.

Once all of the tests have been completed, and necessary adjustments made, the tests may be run at full typewriter speed. Each test is entered as before, but after the test has started, switch #1 is placed in the on position. The test will now run at full speed. The #1 switch must be put back in the off position before proceeding to the next test. After all necessary adjustments have been made, and the proper characters are printed in the self-test mode, the self-type mode may be entered.

The typewriter must be turned off before changing switches, as the interface only reads the switches on power on.

With the "T" switch, #8, in the off position, pushing the toggle switch on the outside of the unit down into its momentary position and then releasing it will cause the unit to enter the self-type mode. The typewriter will repetatively type out all of the characters it can print, starting with a space and ending with a carriage return. The sequence should look as follows:

!"#$'()*+,-./0123456789:;,=.?@ABCDEFGHIJKLMNOPQRSTUVWXYZ½;¼¢_'abcdefghijklmnopqrstuvwxyz(1)

This sequence will repeat until the toggle switch is pushed into its upper (hold) positon.

If the preceding sequence is printed correctly, the mechanical portion of the interface is reasonably well adjusted.

3.3 Serial configuration

When configured for RS-232 mode, the ESCON system can be driven at eight different baud rates, with either RTS handshaking or XON/XOFF handshaking. The following section describes the cable connections and switch settings used for RS-232 with the ESCON system.

Connections at the DB25S EIA connector on the ESCON chassis are as follows:

PIN	NAME	FUNCTION
1	Chassis	Chassis ground
2	TXD	Transmit data (XON/XOFF line)
3	RXD	Receive data (Data from computer)
4	RTS	Request to Send (Level-based handshake)
7	GND	Ground for signal

A serial cable for the ESCON system connects pin 3 to the computer's data output line, pin 7 to the computer's signal ground, and either pin 2 or 4 to the computer's handshake line (if available). The XON/XOFF signal used in some computer systems is available on pin 2. Pin 4 provides a +12V level when the ESCON system is ready to accept data from the computer, dropping to -12V when the input buffer is full. As the characters received by the system are printed, the RTS line will alternately go low and high. Pin 4 on the ESCON end of the cable may be connected to pin 20 on the computer for systems using DTR handshaking.

To configure the dip switch on the ESCON board for serial mode, the "P" switch, #5, must be set to the off position as marked on the switch. The three "D" switches, #1,2, and 3, select the baud rate for data transmission as shown on the following page.

"D" SWITCH #			BAUD RATE
1	2	3	
C	C	C	110
O	C	C	150
C	O	C	300
O	O	C	600
C	C	O	1200
O	C	O	2400
C	O	O	4800
O	O	O	9600

NOTE: C=ON OR CLOSED
O=OFF OR OPEN

"ON" is marked on switch

If the computer does not have handshaking capabilities, the baud rate must be set to 110 baud.

The RTS line may be inverted in level for use with the Heath and Zenith computer systems. This involves cutting a trace on the circuit board and soldering a jumper in another location. This will be done at the factory for all orders specifying Heath or Zenith computers. If you require this capability, please contact ESCON directly for information.

3.4 Parallel configuration

When configured for parallel mode, the ESCON system will accept data from either negative-going or positive-going computer strobe lines, and handshake using either Busy (level), or DAC (pulse) handshaking formats. The following sections give the cable connections and dip switch settings used in configuration of the system for parallel mode.

The parallel cable pin numbers and descriptions at the EIA connector mounted on the chassis are as follows:

PIN	FUNCTION
13	D0 (LSB of data)
25	D1
12	D2
24	D3
11	D4
23	D5
10	D6
22	D7 (Not used)
21	Input strobe (polarity selectable)
19	Busy (high equals Busy)
18	DAC (handshake pulse, polarity selectable)
7,8,9	Ground

A parallel cable between a computer and the ESCON unit connects D0 through D6 to the computer's D0-D6, the computer's strobe to the ESCON strobe line, ground to ground, and either Busy or DAC to the computer's handshake line as appropriate.

An eight-position dip switch is located on the circuit board. The individual switch marked "P" on the board, #5 at the switch, must be set to the on position for parallel mode. "D" switch #1 selects the polarity of the incoming strobe, with the on position selecting a positive strobe, and the off position selecting a

negative one. "D" switch #2 selects the polarity of the DAC pulse for those systems which require it. The off position selects a normally high, negative-going pulse, with the on position giving the inverse.

The typewriter must be turned off before changing switches, as the interface unit only reads the switches on power on.

4.1 Technical description

The ESCON EP-104 electronic systems consists of a single printed circuit board with connectors at both ends. The board is housed in a dual-U aluminum enclosure along with a fuse, transformer, 110V EIS power connector, voltage regulator, and a three-way subminiature toggle switch.

The electronic system is microprocessor controlled and performs its function under program control. It utilizes a 6802 microprocessor, which provides the clock, logical control, and RAM (128 bytes internal). A 2708 1K EPROM is used for program storage. A 6522 VIA IC is used for system communication, with 20 lines going to the solenoid drivers, input switches and the RS-232 UART clock. A 6821 parallel interface IC is used for parallel input and also drives the bell option. For serial operation, a 6850 UART is utilized, with 1488 (75188), and 1489 (75189) IC's performing level conversion.

A received character from either the serial or parallel circuits will cause the processor to initiate an interrupt routine, which reads the data and places it in a 96-character buffer. The main loop of the program reads data from the buffer and either prints a character, or in the case of commands, performs the appropriate command. The program will loop until a character is received. When the buffer is full, the program sets the appropriate handshake line for either serial or parallel operation.

The bell option has three operating modes, distinguished by separate tones. If the buffer overflows, a high-pitched tone

will sound, and the data will be discarded. A slightly louder tone is produced for the ASCII bell code (07). A low tone is produced for the hold character, ASCII 02. At this point the unit will halt and wait for the toggle switch on the unit to be flipped up and then back to the run position.

5.1 Troubleshooting

The following guidelines should be consulted when troubleshooting the ESCON interface system:

	SYMPTOM	REMEDY OR CHECK
1.	Missing or wrong characters	Check mechanical adjustment, use test routine
2.	Consistent wrong characters	Check mechanical adjustment, possible open solenoid coil or driver transistor, use test routine.
3.	Blocks of characters missing	Possible overflow due to improper handshaking-check wiring connections and dip switch settings.
4.	Serial characters sent-no printing	Check baud rate settings and cable connections
5.	Parallel characters sent-no printing	Check switch settings of strobe and DAC (if used) check handshake connections

The following information is included for those customers who have the equipment and the expertise to troubleshoot electronic circuits. Caution is advised, as the warranty will be voided if the unit is misused.

6.	Power Supply check points:	+5V - 2708, pin 24 -5V - 2708, pin 21 +12V - 2708, pin 19 -12V - 1488, pin 1 +12V (serial) - 1488, pin 14 +18V 1000 mfd. cap, + side -18V 1000 mfd. cap, - side
7.	1&2 above OK, still misses characters	Check print timing (17 ms.) 6522, pin 19. Test power levels and solenoid paths

	SYMPTOM	REMEDY OR CHECK
8.	4&5 above OK, still no printing	Check system clock (6802-37), reset high (6802-40), IRQ pulse (6802-4) 30-50 micro-second for each character received, check baud rate clock (6850-3), serial data in (6850-2)
9.	Solenoid always on	Check solenoid output of 6522, should be high at idle If OK, driver probably bad
10.	Solenoid never on	Check coil continuity, 6522 output

NOTE: The solenoid drivers are interfaced with open collector devices and can be tested by grounding the side of the base resistor farthest away from the transistor. Caution should be observed as grounding the wrong side of these 560 ohm resistors will destroy the output driver. If the solenoid operates properly on this test, the the 6522 pin that drives that solenoid should be checked for 50 ms. pulses while the unit is printing.

6.1 System Control Codes

The ESCON electronic interface recognizes the following ASCII control codes:

DECIMAL	OCTAL	HEXADECIMAL	ACTION
2	2	2	The ESCON unit will immediately halt, however the information in the buffer will be retained. When the external toggle switch is placed up (non-momentary position), and then back to the center position, the typing will resume from where it left off.
7	7	7	Bell code, if the Bell option is incorporated, a tone will sound.
8	10	8	Backspace code, if Backspace option is incorporated in the system the unit will perform that function
9	11	9	Horizontal tab-if Tab option is in typewriter it will go to the next mechanical tab stop
10	12	0A	Line feed-Carriage return will be performed only if this code is not preceded by a carriage return code
12	14	0C	Form feed-Carriage returns to the end of page will be executed.
13	15	0D	Carriage return-will cause a physical carriage return. If followed by a line feed, the line feed will be ignored
27	33	1B	ESC or Control (- will delete one following character.

6.2 Customer EPROM changes

As shown on the following page, the ASCII decoding table is placed at the start of the EPROM to facilitate changes by persons familiar with software. This translation table runs from ASCII

0 through 127 (decimal), or 7F (hex). The first 32 (decimal) or 20 (hex) locations comprise the control table, with translation of the nine control codes occuring during character lookup. The remainder of the table is for character translation, with magnet actuation determined by the value placed at the translation location. Annotation on the listing gives the appropriate magnet translation scheme.

There are two additional locations that may be changed:

1. Location 03F6 contains the number of lines per page for the form feed, which is set to 66 decimal as standard.
2. Location 03F7 contains the UART setup parameters for RS-232 mode. These are factory set for 95 hex, which gives one stop bit, 8 data bits, and RTS high. See a data sheet for the 6850 IC if changes are necessary.

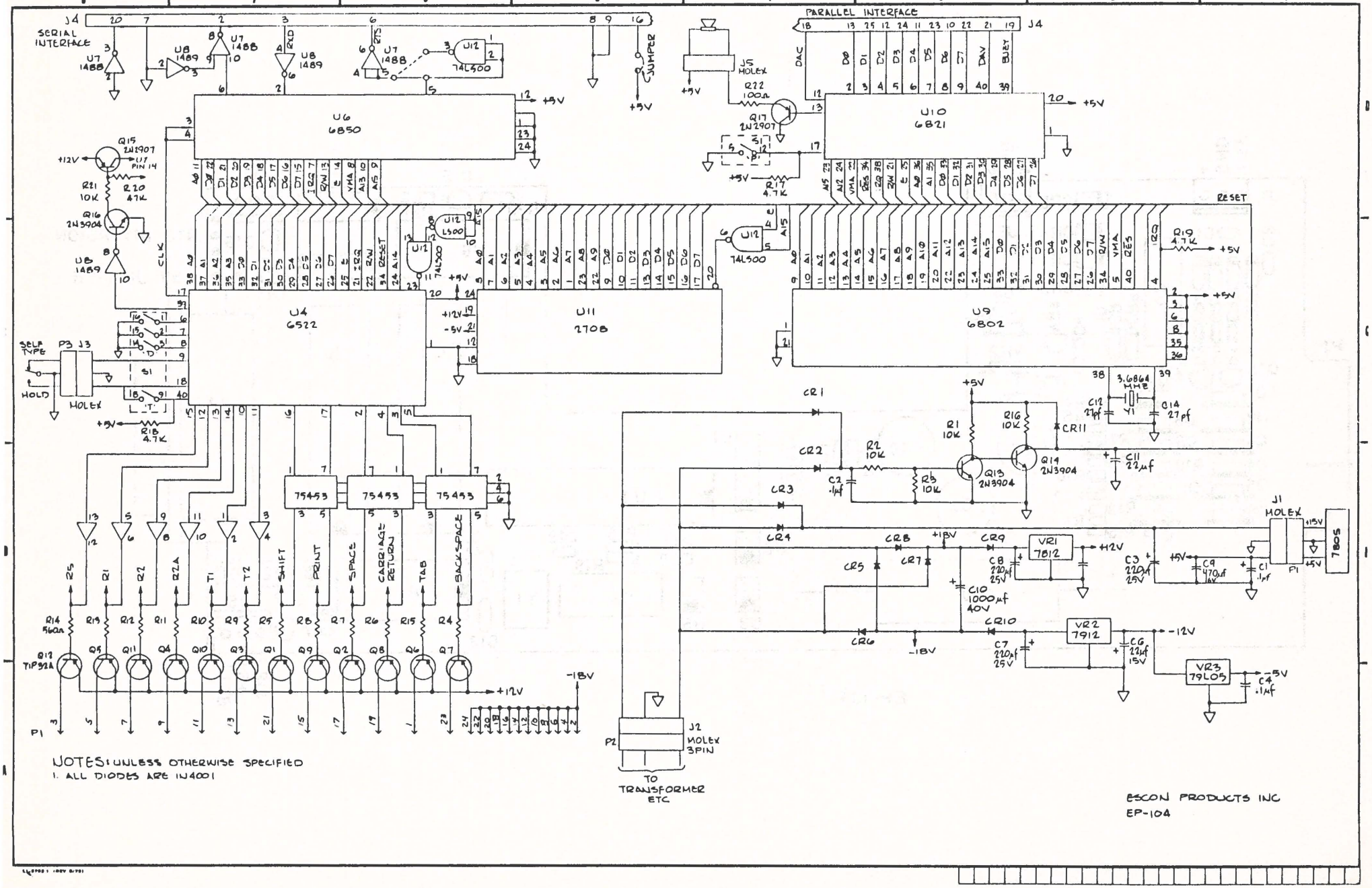

NOTES: UNLESS OTHERWISE SPECIFIED
1. ALL DIODES ARE 1N4001

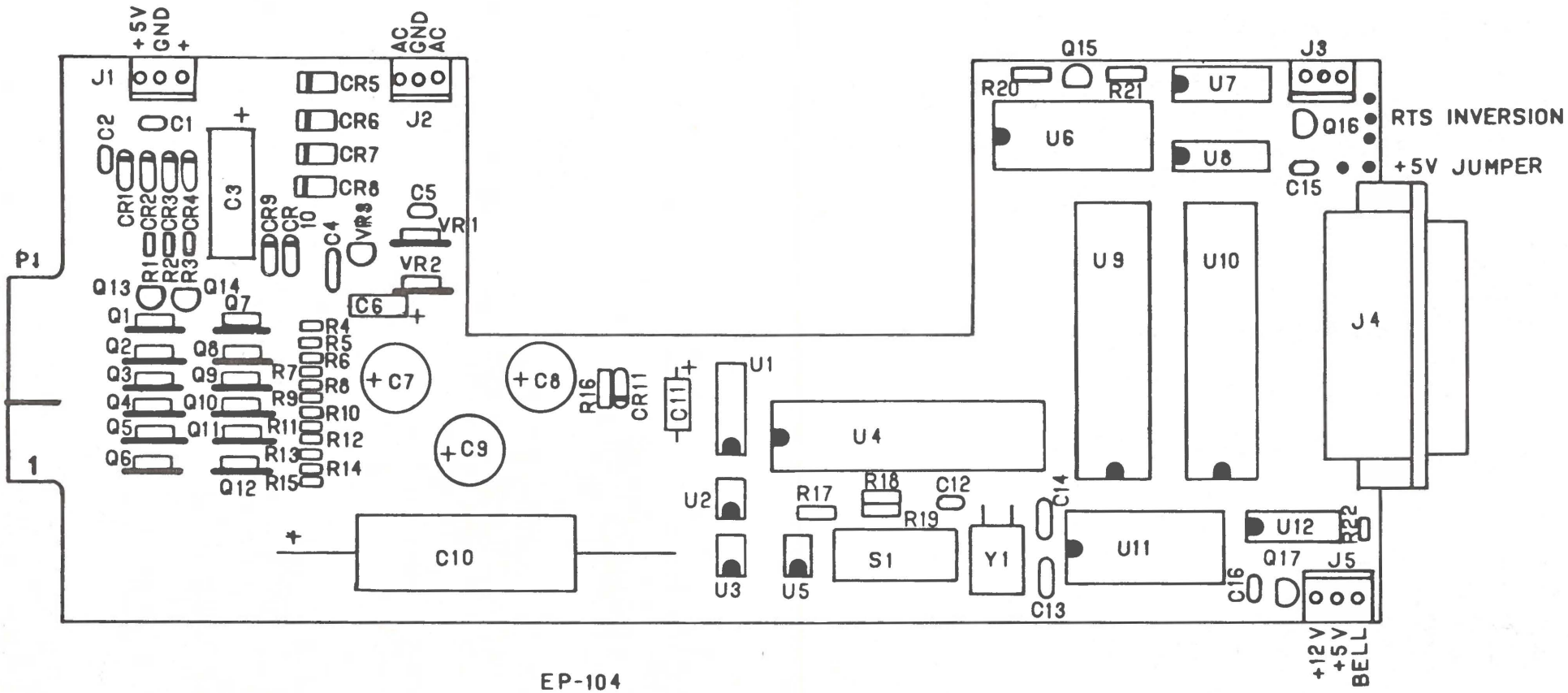
+5V
GND
+
J1
AC
GND
AC
J2
CR5
CR6
CR7
CR8
C2
C1
C3
CR1
CR2
CR3
CR4
CR9
CR10
C4
VR3
C5
VR1
VR2
C6
P1
1
Q13
Q14
Q7
Q1
Q2
Q3
Q4
Q5
Q6
Q8
Q9
Q10
Q11
Q12
R1
R2
R3
R4
R5
R6
R7
R8
R9
R10
R11
R12
R13
R14
R15
C7
C8
C9
C10
R16
CR11
C11
U1
U2
U3
U4
U5
R17
R18
R19
C12
S1
Y1
C14
C13
U11
U12
R22
Q17
C16
J5
+12V
+5V
BELL
Q15
R20
R21
U6
U7
U8
J3
Q16
RTS INVERSION
+5V JUMPER
C15
U9
U10
J4

EP-104

PHOENIX PARTS LIST

REF	TYPE AND DESCRIPTION
	CAPACITORS
C1	.1MF, 12V, CERAMIC, RADIAL
C2	.1MF, 12V, CERAMIC, RADIAL
C3	220MF., 25V, ELECTROLYTIC, AXIAL
C4	.1MF, 12V, CERAMIC, RADIAL
C5	.1MF, 12V, CERAMIC, RADIAL
C6	22MF, 16V, ELECTROLYTIC, AXIAL
C7	220MF, 25V, ELECTROLYTIC, RADIAL
C8	" " " "
C9	470MF, 16V, ELECTROLYTIC, RADIAL
C10	1000MF, 50V, ELECTROLYTIC, AXIAL
C11	22MF, 16V, ELECTROLYTIC, AXIAL
C12-16	.1MF, 12V, CERAMIC, RADIAL
	DIODES
CR1-4	1N4001
CR5-8	1N4720
CR9-11	1N4001
	TRANSISTORS
Q1-12	TIP32A
Q13-14	2N3904
Q15	2N2907
Q16	2N3904
Q17	2N2907
	VOLTAGE REGULATORS
VR1	7812 (+12V@1A)
VR2	7912 (-12V@1A)
VR3	79L05 OR LM320LZ-5.0 (-5V@100MA)
	RESISTORS
R1-3	10K, 1/4W, 5%
R4-15	560 OHM, 1/4W, 5%
R16	10K, 1/4W, 5%
R17-19	4.7K, 1/4W, 5%
R20	47K, 1/4W, 5%
R21	10K, 1/4W, 5%
R22	100 OHM, 1/4W, 5%

PHOENIX PARTS LIST

INTEGRATED CIRCUITS

U1	7407
U2	75453
U3	75453
U4	6522
U5	75453
U6	6850
U7	1488 OR 75188 (RS-232)
U8	1489 OR 75189 (RS-232)
U9	6802
U10	6821 (PARALLEL)
U11	2708

MISCELLANEOUS

S1	8-POSITION DIP SWITCH, SPST
Y1	CRYSTAL, 3.6840MHZ, PARALLEL RESONANCE
J1-4	MOLEX CONNECTOR, 3-PIN

****

ESCON PRODUCTS, INC.

RS232/PARALLEL SOFTWARE

****
****

ASCII TABLE

128 BYTES LONG, CONTROL TABLE IS FIRST

CONTENTS OF CONTROL TABLE IS AS FOLLOWS:

0 - NO ACTION
1 - LINEFEED (RETURN IS EXECUTED UNLESS PREVIOUS CHARACTER WAS A CHARACTER RETURN)
2 - SPACE
3 - BACKSPACE
4 - TAB
5 - FORM FEED
6 - RETURN
7 - HOLD
8 - BELL
9 - ESC (ONE CHARACTER AFTER IS DISCARDED)
ALL OTHERS - NO ACTION

****

HEX	0	1	2	3	4	5	6	7	8	9	A	B	C	D	E	F
00	0	0	7	0	0	0	0	8	3	4	1	0	5	6	0	0
10	0	0	0	0	0	0	0	0	0	0	0	9	0	0	0	0

****

BAIL CODE TABLE

ARRANGED IN ASCENDING ASCII ORDER, PLACED AT THE BEGINNING OF THE ROM TO FACILITATE CHANGES MADE BY CUSTOMERS. THE TABLE STARTS AT ASCII 32 (SPACE). NOTE THAT SPACE IS A 2 AND IS ACTUALLY PART OF THE CONTROL TABLE.

LOWER 6 BITS ARE BAIL CODE, 7TH BIT IS SHIFT AND THE 8TH IS USED IN THE PRINTABLE CHARACTER TABLE TO INHIBIT PRINTING (I.E. DELETE). THE CONTROL FUNCTIONS ARE NOT DECODED BY THE TABLE.

BIT ORDER IS:

MSB	R5	R2A	R2	R1	T2	T1	LSB

****

HEX	0	1	2	3	4	5	6	7	8	9	A	B	C	D	E	F
20	02	7F	4D	7B	67	4F	6F	0D	43	47	6B	58	28	00	19	24
30	07	3F	1B	3B	27	0F	0B	2F	2B	03	6C	2C	68	18	59	64
40	5B	71	42	6A	6E	4E	78	7C	46	49	5C	4A	66	7D	5A	65
50	4C	48	6D	45	5E	7A	79	41	7E	44	5F	1D	2C	5D	4B	40
60	0D	31	02	2A	2E	0E	38	3C	06	09	1C	0A	26	3D	1A	25
70	0C	08	2D	05	1E	3A	39	01	3E	04	1F	43	26	47	80	80

TRS-80 MODEL I INTERFACING

I. Expansion Interface

The following cable connections should be made between the TRS-80 Expansion Interface printer port and the ESCON Universal Interface system:

NAME	ESCON DB25S	AMP CONNECTOR	EDAC CONNECTOR
D0	13	T	4
D1	25	S	6
D2	12	R	8
D3	24	P	10
D4	11	N	12
D5	23	M	14
D6	10	L	16
D7	22	K	18
Busy	19	H	22
Strobe	21	U	2
Ground	7,8,9	F,A,B,1	24,32,34,33

EDAC CONNECTOR NUMBER: 345 034 500-201
AMP CONNECTOR NUMBER: 583717-5
AMP PIN NUMBER: 583853-4
DESCRIPTION: 2X12 Edge Connector (24 pin double readout),.100 spacing.

TRS-80 MODEL I INTERFACING

II. PRINTER INTERFACE CABLE

An ESCON Universal Interface system may be connected to a TRS-80 which does not utilize the Expansion Interface if Radio Shacks' Printer Interface Cable, R.S #26-1411 is used between the TRS-80 and the ESCON unit. The following connections are used in the cable between the printer interface cable and the ESCON system:

NAME	ESCON DB-25S	26-1411 Edge Connector*
Strobe	21	1
D0	13	3
D1	25	5
D2	12	7
D3	24	9
D4	11	11
D5	23	13
D6	10	15
D7	22	17
Ground	7,8,9	18,23,27
Busy	19	21
+5V	16**	35

* PIN NUMBERS BASED ON ALPHA CONNECTOR #FCC170-40 or equivalent

** Must be tied to +5V by jumper on PC Board in ESCON unit

TRS-80 MODEL II INTERFACING

I. Serial Interfacing

The following connections should be used to connect the ESCON Universal Interface to the TRS-80, Model II, in serial mode:

ESCON PIN	TRS-80 PIN
2	3
3	2
4	5
7	7
20	6,8

Pins six and eight must be tied together on the TRS-80 side. If the A port on the TRS-80 is unused, pins 3,5,6,7, and 8 must be tied together before initialization per page 77 of the Technical Information section of the TRS-80 manual.

The B port will be used to drive the ESCON system. TRSDOS 1.2 must be used, earlier versions are not readily usable. The following commands allow ASCII code to be sent from the B port to the ESCON unit:

```
SETCOM B=(Baud Rate,8,N,1)
FORMS S
```

The baud rate can be any value accepted by the ESCON interface.

TRS-80 MODEL II INTERFACING

II. Parallel Interfacing

The following connections should be used for the cable connecting the ESCON unit to the parallel printer port of the TRS-80, Model II:

SIGNAL NAME	ESCON PIN	TRS-80 PIN
Strobe	21	1
D0	13	3
D1	25	5
D2	12	7
D3	24	9
D4	11	11
D5	23	13
D6	10	15
D7	22	17
Busy	19	21
Out of Paper	6,7,8	23
Ground	6,7,8	4
Ground	6,7,8	2

APPLE CONNECTION INFORMATION

APPLE CONNECTIONS		NAME	ESCON CONNECTIONS
Wire Color	Pin #		Pin #
Brown	1	GND	7,8,9
Red	2	DAC	18
Gray	8	STROBE	21
Black	10	D0	13
Brown	11	D1	25
Red	12	D2	12
Orange	13	D3	24
Yellow	14	D4	11
Green	15	D5	23
Blue	16	D6	10
Purple	17	D7	22
Black	20	GND	7,8,9

Connect the jumper block as shown for the Centronics example on page nine of the APPLE Parallel Interface Card installation and operating manual. The APPLE connections and wire colors above are referenced to figure 2 of that manual. The connections for the APPLE Centronics Card are the same as above, however, the pin numbers refer to the female Centronics-type connector attached to the ribbon cable from the interface board.

SSM AIO CARD

ESCON PIN NUMBER	AIO INTERFACE
1	1
3	2
4	5
7	7

These connections will properly connect the AIO for serial operation with the ESCON unit.

SORCERER CONNECTION INFORMATION

The following cable connections should be made to connect The Exxidy Sorcerer to the ESCON Universal Interface, model EP-104:

NAME	ESCON PIN NUMBER	SORCERER PIN NUMBER
D0	13	16
D1	25	17
D2	12	18
D3	24	19
D4	11	7
D5	23	6
D6	10	5
D7	22	N/C*
GND	7,8,9	8
STROBE	21	3
BUSY	19	25

* (No Connection)

NORTHSTAR PARALLEL CONNECTIONS

The following connections should be made in the computer cable connecting a Northstar computer and the ESCON system:

SIGNAL NAME	ESCON PIN	NORTHSTAR PIN
Strobe	21	6 (PO-FLAG)
D0	13	5
D1	25	12
D2	12	4
D3	24	11
D4	11	10
D5	23	2
D6	10	9
D7	22	1
DAC/ACK	18	7
Ground	7,8,9	13,14,15

Limited Warranty

Escon Products, Inc. (ESCON) warrants to the original purchaser of its products that its assembled and tested products will be free from materials and workmanship defects for a period of ninety (90) days.

The responsibility of Escon hereunder, and the sole and exclusive remedy of the original purchaser for a breach of any warranty hereunder, is limted to the correction or replacement by Escon at Escon's option, at Escon's service facility, of any products or part which has been returned to Escon and in which there is a defect covered by this warranty. Escon will correct any defect in materials and workmanship and restore the product to an operational status free of charge provided that the product is returned to Escon within ninety (90) days of original purchase from Escon. All such returned products shall be shipped prepaid and insured by the original purchaser to:

Warranty Service Department
Escon Products, Inc.
171 Mayhew Way, Suite 204
Pleasant Hill, CA 94523

Escon shall have the right of final determination as to the existence and cause of a defect, and Escon shall have the sole right to decide whether the products should be repaired or replaced.

This warranty shall not apply to any product or any part thereof which has been subject to:

(1) accident, neglect, negligence, abuse or misuse;
(2) any maintenance, overhaul, installation, storage, operation, or use, which is improper; or
(3) any alteration, modification, or repair by anyone other than Escon or its authorized representative.

THIS WARRANTY IS EXPRESSLY IN LIEU OF ALL OTHER WARRANTIES EXPRESSED OR IMPLIED OR STATUTORY INCLUDING THE WARRANTIES OF DESIGN, MERCHANTABILITY, OR FITNESS OF SUITABILITY FOR USE OR INTENDED PURPOSE AND OF ALL OTHER OBLIGATIONS OR LIABILITIES OF ESCON.

Escon expressly disclaims any and all liability arising from the use and/or operation of its products sold in any and all applications not specifically recommended, tested or certified by Escon, in writing. Escon expressly disclaims any liability arising from the use and/or operation of its products and shall not be liable for any consequential or incidental or collateral damages or injury to persons or property.

Escon's obligation under this warranty are conditioned on the original purchaser's maintenance of explicit records which will accurately reflect operating conditions and maintenance performed on Escon's products and establish the nature of any unsatisfactory condition of Escon's products. Escon, at its request, shall be given access to such records for substantiating warranty claims. Escon makes no warranty whatsoever in respect to accessories or parts not supplied by Escon, or to the extent that any defect is attributable to any part not supplied by Escon.

Escon neither assumes nor authorizes any person other than a duly authorized officer or representative to assume for Escon any other liability or extension or alteration of this warranty in connection with the sale or any shipment of Escon's products. Any such assumption of liability or modification of warranty must be in writing and signed by such duly authorized officer or representative to be enforceable. These warranties apply to the original purchaser only, and do not run to successors, assigns, or subsequent purchasers or owners;

AS TO ALL PERSONS OR ENTITIES OTHER THAN THE ORIGINAL PURCHASER, ESCON MAKES NO WARRANTIES WHATSOEVER, EXPRESS OR IMPLIED OR STATUTORY. The term "original purchaser", as used in this warranty shall be deemed to mean only that person to whom its product is originally sold by Escon.

Unless otherwise agreed, in writing, and except as may be necessary to comply with this warranty, Escon reserves the right to make changes in its products without any obligation to incorporate such changes in any products manufactured theretofore.